CONTOUR DC
AIRBUS CONTINUOUS FAN SYSTEM

MANROSE
DESIGNER SERIES



FAN7540 **Contour Airbus DC Continuous Bathroom Fan**

FAN7541 **Contour Airbus DC Continuous High Steam Fan**

Premium exhaust fan with selectable 24/7 continuous, 10 minute run on timer or standard mode, to maintain a fresh and healthy room, with your choice of fascia. All 3 installation modes are controlled to boost from a wired wall switch (not included).

Thank you for purchasing this quality exhaust fan.
To ensure correct function and safety, please read all instructions before using the product and keep all instructions for future reference.

WHEN USING ELECTRICAL APPLIANCES, BASIC SAFETY PRECAUTIONS SHOULD ALWAYS BE FOLLOWED TO REDUCE THE RISK OF FIRE, ELECTRICAL SHOCK AND PERSONAL INJURY.

TECHNICAL DATA

Order Code	Duct (mm)	Fan Type	Max. Fan Watts (W)	Max. Fan Pressure (Pa)	Free Air Fan Performance		Specific Fan Power (W/l/s)	Sound dB(A)	Fascia	Switching
					(l/s)	(m3/hr)				
FAN7540	150	Centrifugal Continuous (24/7)	4	19	24	86	0.17	22	Range Selection	Standard Wired Wall Switch
		Standard	4-15	19-60	24-46	86-166	0.17-0.33	22-32		
FAN7541	150	Centrifugal Continuous (24/7)	4.5	21	32	115	0.14	23	Range Selection	Standard Wired Wall Switch
		Standard	4.5-42	21-118	32-90	115-324	0.14-0.47	23-39		

Note: Airflow data is in accordance with internationally recognised testing standards. Airflow may vary according to style of fascia used.

DIMENSIONS (mm)

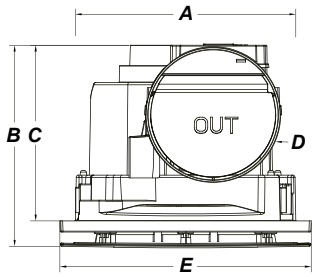

	FAN7540	FAN7541
A	235	291
B	218	227
C	190	195
D	150	150
E	268	328
Cut-Out	ø 240	ø 300

ACCESSORIES



DCT0116 Ø150mm 3m MANROSE Semi-Rigid Ducting (or any Manrose 150mm duct)



DCT0304 Ø150mm Chateau Weatherproof Cowl White

DCT0305 Ø150mm Chateau Weatherproof Cowl Black



DCT0310 Ø150mm Chateau Through Wall Semi-Rigid Duct Kit White

DCT0310 Ø150mm Chateau Through Wall Semi-Rigid Duct Kit Black



DCT1543 Ø150mm Chateau Through Wall Rigid Duct Kit White

DCT1544 Ø150mm Chateau Through Wall Rigid Duct Kit Black

FASCIA SELECTIONS - *sold separately*

Model	Round				Square			
								
	White	Black	White with LED	Black with LED	White	Black	White with LED	Black with LED
FAN7540	DCT4702	DCT4703	DCT4706	DCT4707	DCT4704	DCT4705	DCT4708	DCT4709
FAN7541	DCT4710	DCT4711	DCT4714	DCT4715	DCT4712	DCT4713	DCT4716	DCT4717

ALL ELECTRICAL WORK MUST BE COMPLETED BY A LICENSED ELECTRICIAN.

IMPORTANT

1. This appliance is not intended for use by persons (including children) with reduced physical, sensory or mental capabilities, or lack of experience and knowledge, unless they have been given supervision or instruction concerning use of the appliance by a person responsible for their safety.
2. Children should be supervised to ensure that they do not play with the appliance.
3. Never install the fan where it is extremely hot!
4. Exhaust fans may adversely affect the safe operation of appliances burning gas or other fuels (including those in other rooms) due to back flow of combustion gases. These gases can potentially result in carbon monoxide poisoning. After installation of an exhaust fan such as a partition fan or a duct fan the operation of flued gas appliances should be tested by a competent person to ensure that back flow of combustion gases does not occur.
5. Please ensure the appliance has not been damaged before installing.
6. Check the electrical specifications label corresponds to your electrical supply.
7. When using a double pole switch connection, the switch must be with a minimum 3mm separation on all poles.
8. If the supply cord is damaged, it must be replaced by a suitably qualified person.
9. All wiring must be carried out by a licensed electrician.
10. To ensure maximum possible airflow and performance, flexible ducting should be fully expanded with no unnecessary bends or vertical runs.

Important considerations before installing:

1. This unit must be located and installed in accordance with the latest edition of the AS/NZS3000 wiring rules and local building codes relating to damp situations when installing in bathrooms, near sinks and water taps.
2. For the exhaust fan to work efficiently, replacement air of a volume equivalent to what is being extracted must be able to enter the room. Generally, air would be drawn under the door (20mm undercut), or through a slightly open window. If the room is airtight, the fan will operate poorly. Air flow path should ideally pass over the steam source.
3. Before commencing any cutting, check the mounting location to ensure there is no obstruction such as ceiling frames or joists. Check the electrical wiring can be routed from the wall switch to the mounting location.
4. This fan is not intended for mounting in outside windows or walls.

Avoid The Below Duct Configurations

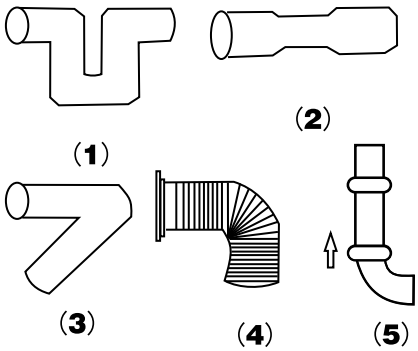

BEFORE INSTALLING THE FAN, MAKE SURE THE POWER IS OFF AT THE MAIN ELECTRICITY SUPPLY.
DO NOT TURN IT BACK ON UNTIL THE FAN IS FULLY INSTALLED AND READY TO USE.

INSTALLATION

NOTE: A means for all pole disconnection must be incorporated in the fixed wiring in accordance with the local wiring rules.

1. Ensure the impeller is free to rotate and the duct outlet is oriented towards the exit vent.
2. Cut the hole for the fan using the template provided ensuring sure the area behind the intended position is free from impediments.
3. Plug fan into socket outlet and (optional) connect an active wire into the ‘additional features terminal’ to enable toggle switch functions (see page 5 for additional information).
4. Using a Phillips head screwdriver firmly secure fixing arms, being careful not to over tighten.
5. Ducting can be attached to the air outlet prior to installing into position (see page 3 for additional information).
6. A standard 3 pin electrical socket with an ON / OFF wall switch is required for installation, please arrange a licensed Electrician to prepare this.
7. Switch the fan ON and check for excessive vibration or noise. If fan is running as desired secure the fascia by squeezing the spring fasteners and insert into the slots in the fan body.

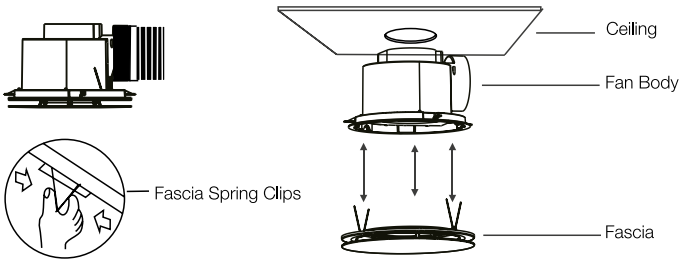

NOTE: When installing the fan in a bathroom, the duct should decline downwards about 10 degrees

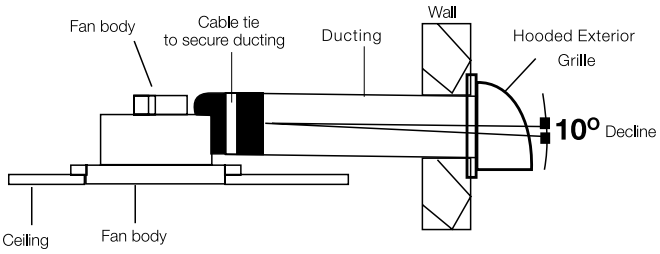

OPERATION

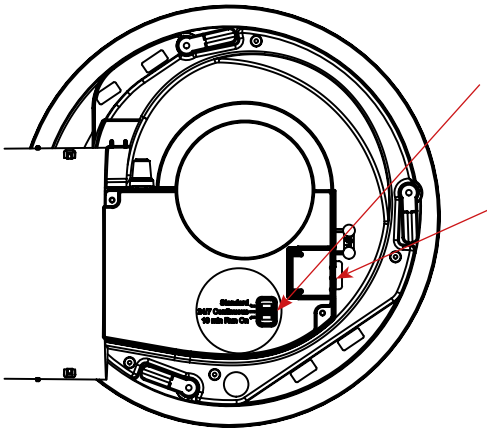



PLEASE NOTE:
For activation of '24/7 Continuous' or '10min Run On' functions, the toggle switch should be set prior to connecting the power supply.

Additional Features Wiring Terminal.
Connect active supply here for activation of '10 min run on' or '24/7' settings. See wiring diagram on page 5.

WIRING CONFIGURATIONS

Wiring for Standard Operation

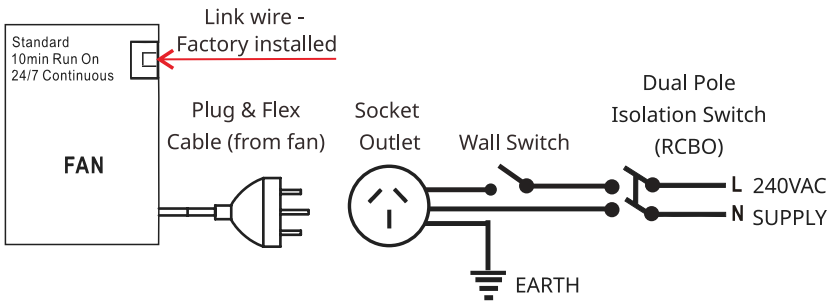

Wiring for 10 min Run On or 24/7 Continuous Operation

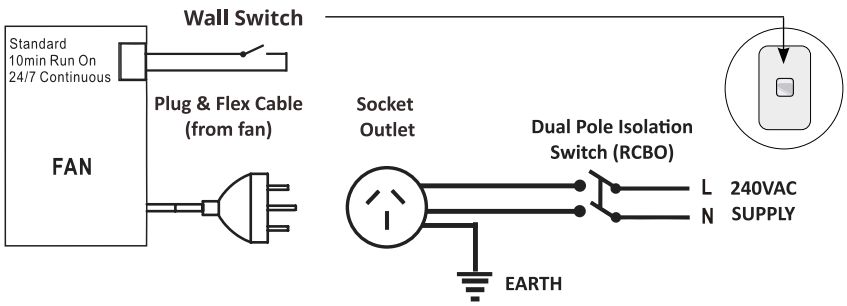

Fan control switch: When turned OFF, the fan will enter either '24/7 Continuous (trickle)' or '10-minute Run-on' mode, depending on the toggle switch position. See page 4 for additional information.

PLEASE NOTE: To activate the '24/7 continuous (trickle)' or '10-minute run-on' features, an active control switch must be connected by a licensed electrician. Ensure the power supply is fully isolated via the dual pole isolation switch (RCBO) before removing the factory-installed link wire.

Standard Operation

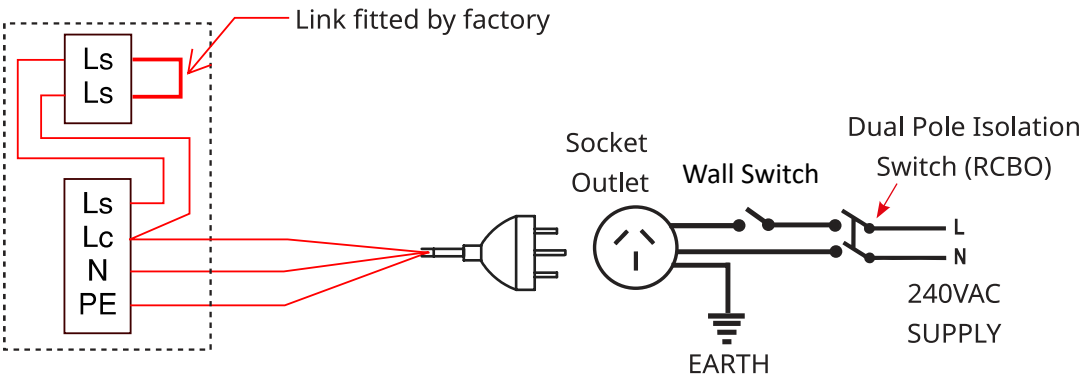

Rot / Continuous

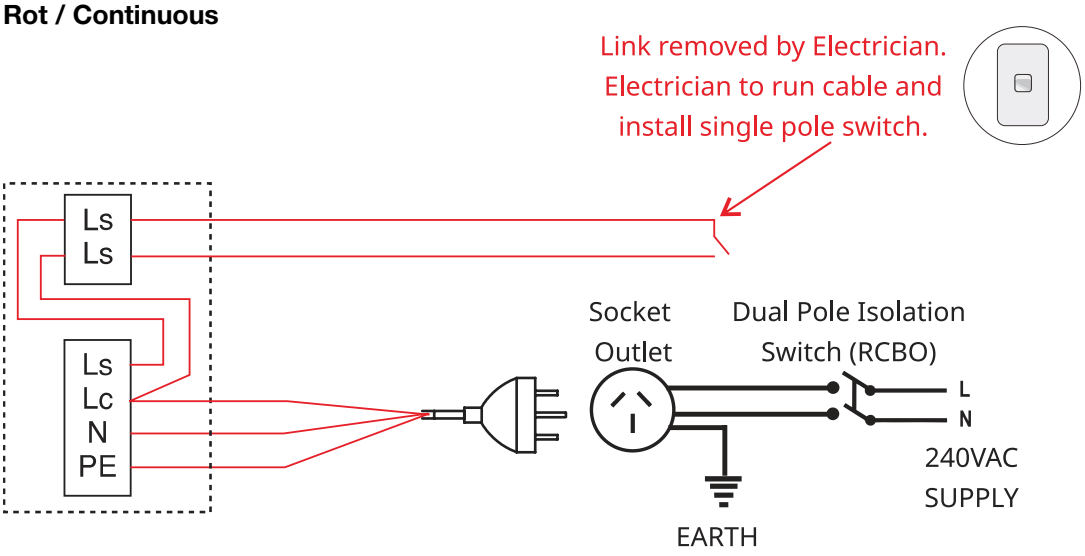

USE A 2-GANG SWITCH TO ALLOW THE 24/7 TRICKLE MODE OR THE 10-MINUTE TIMER TO BE SWITCHED OFF WHEN NOT NEEDED.

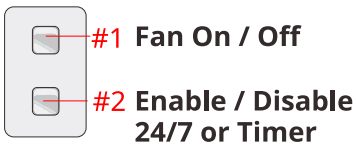

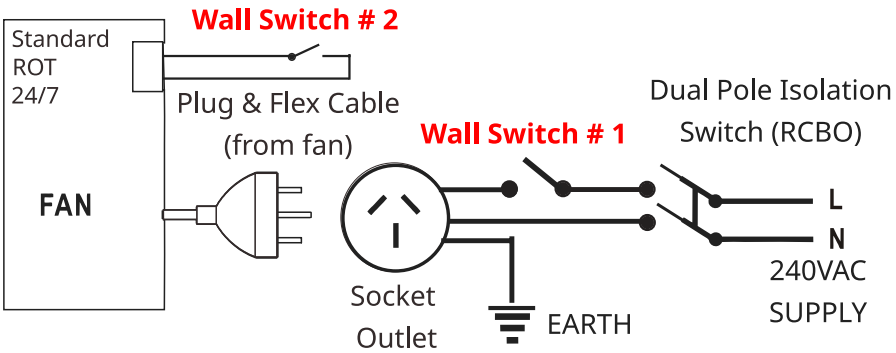

Standard
The default position. The exhaust can simply be turned on and off at the wall switch (not included), just like a standard exhaust fan. No extra wiring is required for this configuration.

10 Min Run On
The fan will continue to operate at the selected speed for 10 minutes after the wall switch is turned off. This helps to remove any residual steam, moisture and condensation that can linger after bathing or showering.

24/7 Continuous
The fan will revert to a very low speed (trickle) whenever the wall switch is turned 'OFF'. This creates a subtle airflow that helps to prevent mould and condensation in the bathroom and promotes a healthier living environment by encouraging air changeover within the home. i.e. stale air will slowly be replaced with fresh air.

Speed Control Dial
The Speed Control Dial adjusts the airflow volume (and noise level) to suit specific applications or personal preference such as: Commissioning to exact airflow specifications or climatic variation in temperature or humidity.

Speed Control Dial
(accessible when fascia removed)

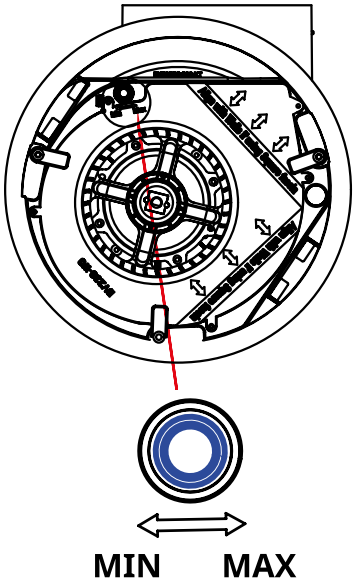

Installing A LED Fascia

1. Attach LED driver to the fan body by peeling the backing from the double-sided tape (see diag. 1 for positioning).
2. Plug the Fan and LED driver into a power outlet. Knock out the stamped tab in the motor body and feed the LED output connector through (See diag. 2).
   NOTE: A second, separately switched outlet may be used for individual fan and light control.
3. Secure fan body to the ceiling using the clips and screw to tighten.
4. Connect the LED light plug to the LED driver socket securely (See diag. 3).
5. Feed LED cable back through the hole so the cables are hidden in the ceiling cavity

NOTE: TO AVOID OVERHEATING, DO NOT COVER THE LED DRIVER.

Diag.1 Attach LED driver to fan by removing backing from double sided tape



Diag. 2 Feed connector through hole



Diag. 3 Connect LED driver and panel plugs, screw locking ring to secure



Tri-Colour Operation

Set the switch on the driver to the desired colour temperature prior to installation.

NOTE: Switch the fan on and check for excessive vibration or abnormal noise before installing the fascia.

Secure the fascia by squeezing the fastening springs together and inserting them into the slots in the fan body. Check the fascia is secured firmly and sitting close to fan body

LED Driver





LED Driver Tri-colour selector switch (CW/NW/WW)

FAILURE TO FOLLOW SAFETY INSTRUCTIONS MAY RESULT IN CONSIDERABLE DANGER TO THE USER

MAINTENANCE REQUIREMENTS

1. The contour extract fan system is for unfiltered air to be ducted to the outside of the building in compliance with the New Zealand Building Code G4 Acceptable Solution 1 Fifth Edition. Only minor maintenance is required, as the fan is a powerful centrifugal unit with a sealed assembly.
2. Annual surface cleaning of the fascia only, and exterior cowl/grille is required. The contour fan contains a motor with a sealed bearing assembly. This does not require maintenance.

MAINTENANCE CAUTIONS

1. Make sure the fan is always switched off before cleaning.
2. Make sure to use the fan with the specified voltage as stated on the rating sticker.
3. Never immerse any part of the fan in water or other liquids.
4. Never use flamable solvent for cleaning the fan.
5. Never allow water to contact the electrical parts such as switch and motor.
6. Never immerse blades or other resin parts in hot water over 60 °C.
7. Never install the fan under extreme hot environments.

CLEANING, STORAGE AND DISPOSAL

Before cleaning, turn the unit off, cut off the power supply from electrical outlet and wait for the unit to cool down.

- To clean the unit, use a soft cloth to wipe off any dust.
- Do not try to open the unit without a registered electrician. Improperly installed units can be dangerous.
- This product is in accordance with the relevant safety requirements. Repairs should only be carried out by registered electricians using original spare parts.

If you do not plan to use the fan for extended periods of time, it is recommended that it is cleaned and stored (preferably in its original packaging)in a cool, dry place.

Do not dispose of electrical products with household waste. Please check with your local council for advice on disposal or recycling. If electrical appliances are disposed of in landfills or dumps, hazardous substances can leak into the groundwater and get into the food chain, damaging your health and well-being.

Distributed by Simx Limited
PO Box 14347, Panmure, Auckland 1741, New Zealand

Simx Warranty Information

In this warranty:

We means Simx;

You means the consumer of the Goods

Supplier means the authorised distributor or retailer that sold you the Goods in New Zealand or Australia;

and Goods means the Simx product accompanied by this warranty and purchased in New Zealand or Australia.

The benefits provided to you under the following warranty are in addition to any other rights and remedies available to you under the law:

1. If, during the time from the date of purchase (Warranty Period), there is a defect in the Goods due to improper workmanship or material, we will replace or repair the Goods without charge. Any replacement product is warranted only for the time remaining on the original Warranty Period.
2. We are not obliged to replace or repair the Goods under clause 1 if the Goods have been improperly stored, installed, connected, used, operated, repaired, damaged, abused, tampered with, altered (without our written approval), or not maintained in accordance with our recommended installation, connection and operating instructions.
3. We exclude liability for:
    a) consequential loss or any other loss or damage caused to property or persons arising from any cause whatsoever;
    b) damage to consumable items such as lamps and starters; and
    c) damage arising from normal wear and tear.
4. In order to claim under this warranty you must, within the Warranty Period, return the Goods to the Supplier, together with the original proof of purchase including the details below:

    Supplier Name _____

    Date of Purchase _____

    Model Number _____

    Invoice/Receipt No. _____

5. This warranty does not cover the cost of claiming under the warranty or transporting the Goods to and from the Supplier.

Our Goods come with guarantees that cannot be excluded under the New Zealand and Australian Consumer Law. You are entitled to a replacement or refund for a major failure and for compensation for any other reasonably foreseeable loss or damage. You are also entitled to have the Goods repaired or replaced if the Goods fail to be of acceptable quality and the failure does not amount to a major failure.

To speak to someone about your Simx product or claiming under this warranty, please contact:

Simx Ltd New Zealand
p: +64 9 259 1660
www.simx.co.nz